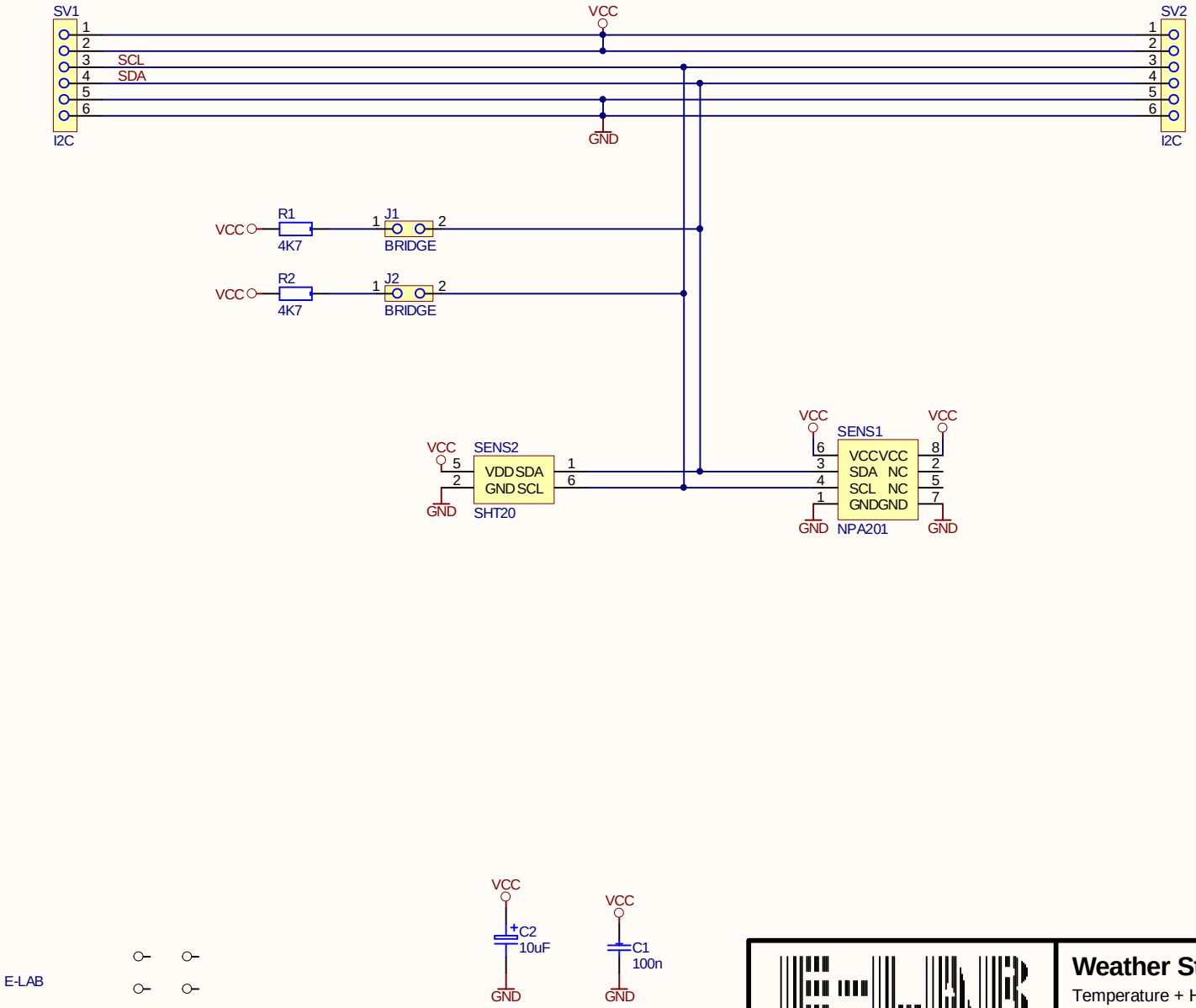

COMPUTERS
D74906 Bad Rappenau
Tel. 07268/9124-0
Fax 07268/9124-24

Weather Station

Temperature + Humidity + Pressure

Copyright by E-LAB rev1

Datum: 05.10.2016
Name: R. Hofmann

Rev#	Datum	Rev.	Obj.

Blatt 1 von 1